RPC-59303-1

COMPLETE ASSEMBLY PART NO.'S

	SUFFIX	OPERATING COIL (VOLTS) ITEM 6		SUFFIX	OPERATING COIL (VOLTS) ITEM 6	ARC SHIELD ASSEMBLY ITEM 14
1 POLE COPPER CONTACT PART NO.: 59301-XXX	101	115/125	3 POLE COPPER CONTACTS PART NO.: 59303-XXX	101	115/125	1
	102	230/275		102	230/275	1
	103	57.5		103	57.5	1
	104	24		104	115/125	–
1 POLE SILVER CAD-OXIDE FACED CONTACT PART NO.: 59301-XXX	301	115/125		105	230/275	–
	302	230/275		106	57.5	–
	303	57.5		107	24	1
	304	24		108	24	–
2 POLE COPPER CONTACTS PART NO.: 59302-XXX	101	115/125	3 POLE SILVER CAD-OXIDE FACED CONTACTS PART NO.: 59303-XXX	301	115/125	1
	102	230/275		302	230/275	1
	103	57.5		303	57.5	1
	104	24		304	115/125	–
2 POLE SILVER CAD-OXIDE FACED CONTACTS PART NO.: 59302-XXX	301	115/125		305	230/275	–
	302	230/275		306	57.5	–
	303	57.5		307	24	1
	304	24		308	24	–

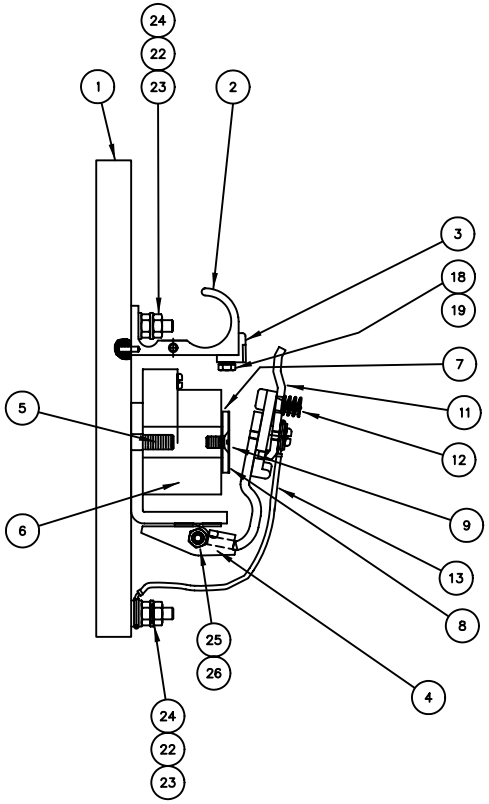

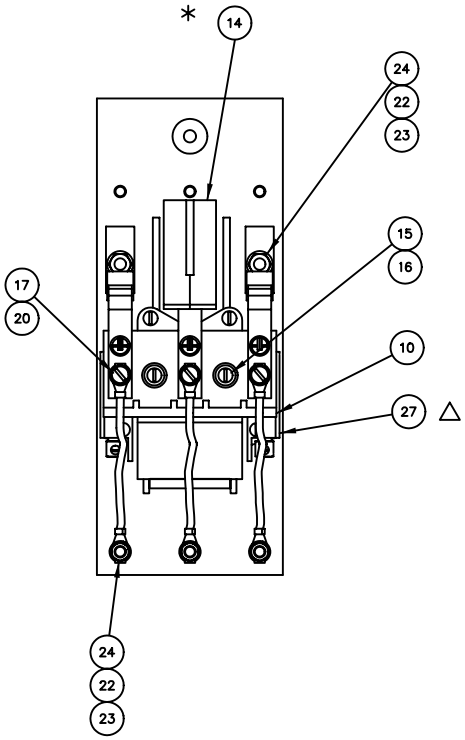

REPAIR PARTS DRAWING FOR 1, 2, & 3 POLE (#0 SIZE) MAGNETIC CONTACTOR

NOTE: WHEN ORDERING REPAIR PARTS BE SURE TO FURNISH SERIAL NUMBER & TYPE NUMBER WHICH ARE LOCATED ON THE NAMEPLATE. ALSO THE PART NAME & THE PART NUMBER.

	ITEM	DESCRIPTION	PART NO.	PART NO. 59301-XXX 1 POLE QTY.	PART NO. 59302-XXX 2 POLE QTY.	PART NO. 59303-XXX 3 POLE QTY.
	1	BASE	68013-003	1	1	1
□	2	UPRIGHT & CU CONTACT	58851-105	1	2	3
□	2	UPRIGHT & AG CONTACT	58851-110	1	2	3
+ □	3	STATIONARY CONTACT (COPPER)	02315-000	1	2	3
+ □	3	STATIONARY CONTACT (SILVER CAD-OXIDE FACED)	02315-001	1	2	3
	4	ARMATURE-STATOR HINGE PIN ASSEMBLY	58675-003	1	1	1
	5	.312-18 X 1.250 LONG STUD	66475-017	1	1	1
□	6	COIL (115/125V D.C.)	68014-002	1	1	1
Ⓒ □	6	COIL (230/275V D.C.)	68014-008	1	1	1
□	6	COIL (57.5V D.C.)	68014-003	1	1	1
□	6	COIL (24V D.C.)	68014-004	1	1	1
	7	CORE CAP	18048-000	1	1	1
	8	NONMAGNETIC SPACER	19683-001	1	1	1
	9	.250-20 X .500 LONG FLAT HEAD SCREW BRASS	47665-108	1	1	1
	10	FINGER BOARD	42005-000	1	1	1
□	11	MOVABLE FINGER	05721-000	1	2	3
□	11	MOVABLE FINGER (SILVER FACED)	05721-001	1	2	3
	12	FINGER SPRING	04657-000	1	2	3
	13	FINGER SHUNT	04870-001	1	2	3
	14	ARC SHIELD ASSEMBLY	42855-001	–	–	1
	15	#8-32 X .625 LONG ROUND HEAD SCREW	47241-104	2	2	2
	16	#8 SPLIT LOCK WASHER	47252-064	2	2	2
	17	#10-32 X .375 LONG SEMS. SCREW BRASS	49138-083	1	2	3
+	18	#10-24 X .375 LONG HEX HEAD SCREW S.S.	47779-042	1	2	3
+	19	#10 SPLIT LOCK WASHER	47252-065	1	2	3
	20	#10 FLAT WASHER BRASS	47251-008	1	2	3
Ⓐ Ⓓ	22	.250 FLAT WASHER – BRASS	47251-041	5	10	15
Ⓓ	23	.250-20 HEX NUT – BRASS	47254-011	4	8	12
	24	.250-20 X 1.31 LONG STUD	66457-015	2	4	6
	25	#10-32 HEX NUT BRASS	47254-009	1	1	1
	26	#10 EXTERNAL LOCKWASHER	47303-006	1	1	1
△	27	AUXILIARY ASSEMBLY 1 N.O. & 1 N.C. CONTACT (KIT)		AS REQUIRED		

+ THESE ITEMS ARE FURNISHED WITH UPRIGHT AND CONTACT ASSEMBLY

□ SELECT ONE ITEM ONLY (QUANTITIES AS SHOWN)

△ AUXILIARY CONTROL CONTACT ASSEMBLY P/N 68011-003 TO BE ORDERED SEPERATELY. AUXILIARY CONTROL CONTACT ASSEMBLY IS NOT INCLUDED WITH COMPLETE CONTACTOR ASSEMBLY

* NOTE: THE ARC SHIELD ASSEMBLY IS USED ON THREE POLE APPLICATIONS ONLY. THE ARC SHIELD IS USED ON THE CENTER POLE FOR POWER CIRCUITS AND IS NOT REQUIRED FOR CONTROL CIRCUITS.

1:2

Rev	DATE	BY	DESCRIPTION
E	5-24-00	KR	AUX #68011 WAS 68040
D	2-11-98	TLJ	REDRAWN TO CAD, REMOVED ITEM 28, CHANGED ITEMS 29 & 30
C	2-11-94	WM/JC	REVISED PER ECN 5210-260
B	6-9-80	FEB/CH	ADDED KIT P/N FOR AUX.
A	5-23-80	FEB	WAS 47250-502 & REMOVED 1 FROM QTY

LINEAR: 0.X =±.050; 0.XX =±.020; 0.XXX =±.005
HOLE: PUNCH ±.002; DRILL ≤ .50 ±.005; > .50 ±.008; REAM SPECIFIED
ANGLES: DIMEN. ± 1°; UNDIM. 90° ±2°
CADD NO. 59303001
R.M.S.

BULL. 5210 REPAIR PARTS FOR 1, 2, & 3 POLE 15 AMP (#0 SIZE) MOLDED BASE D.C. CONTACTOR

DATE 10-23-79 | DR. DRG | CK. | REF.

Hubbell Industrial Controls, Inc. 50 Edwards Street Madison, Oh. 44057

DRG. NO. RPC-59303-1 1 OF 1