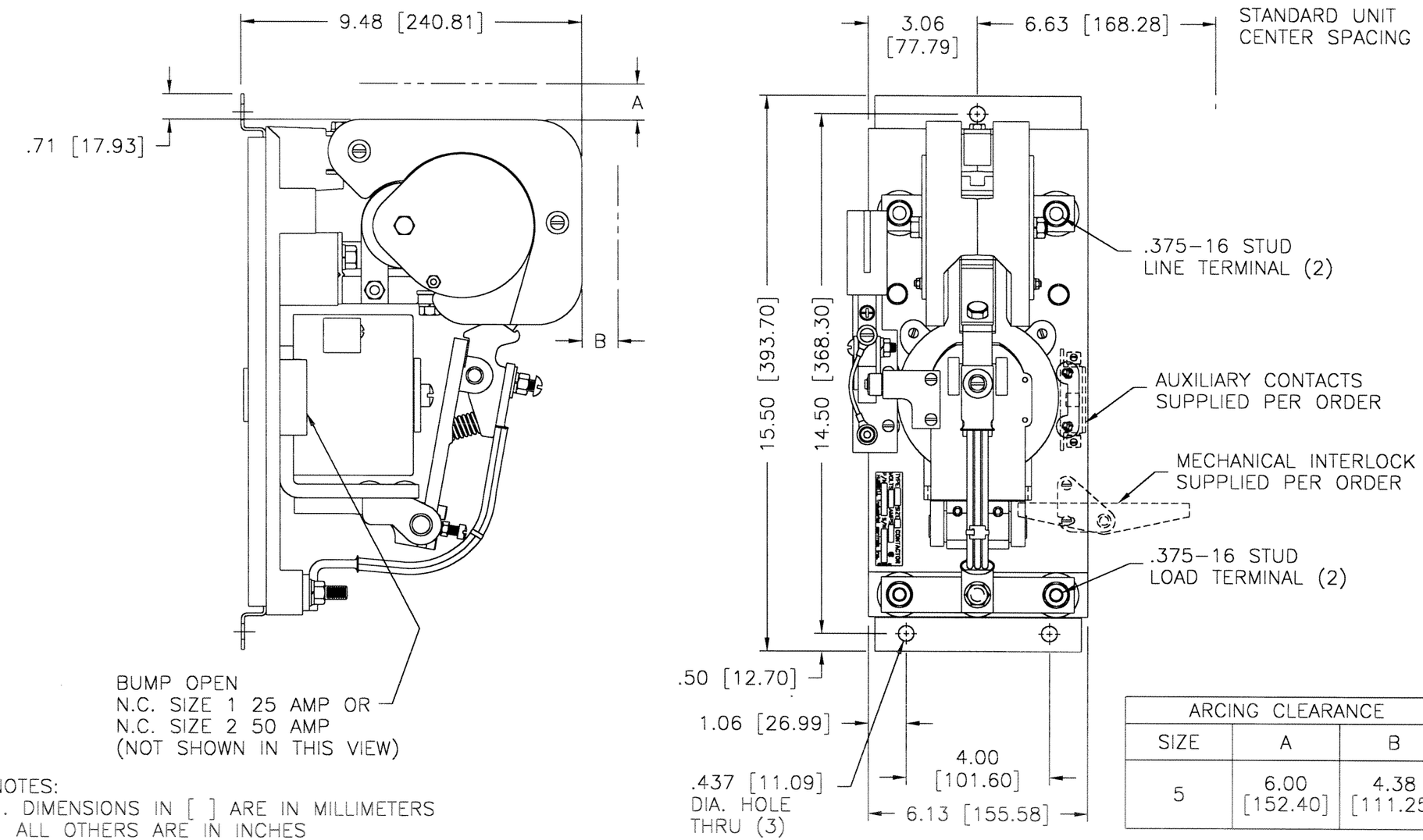

ARCING CLEARANCE		
SIZE	A	B
5	6.00 [152.40]	4.38 [111.25]

NOTES:
1. DIMENSIONS IN [ ] ARE IN MILLIMETERS
   ALL OTHERS ARE IN INCHES
2. DIMENSIONS "A" & "B" ARE FOR ARCING CLEARANCE

PLOT SCALE 1=4

Rev	DATE	BY	DESCRIPTION
E			
D			
C			
B			
A			

LINEAR	HOLE		ANGLES
0.X =±.050	PUNCH	±.002	DIMEN. ± 1°
0.XX =±.020	DRILL ≤ .50	+ .004 − .002	
0.XXX =±.005	DRILL > .50	+ .010 − .004	UNDIM. 90° ±2°
	REAM SPECIFIED		

CADD NO. 58888004

R.M.S.

SIZE 5 (300 AMP)
N.O. 1 POLE DC CONTACTOR OUTLINE
MOLDED BASE WITH N.C. BUMP OPEN
MODEL 2000

DATE 4-26-00 | DR. T. JOHNSON | CK. | REF.

Hubbell Industrial Controls, Inc.
50 Edwards Street Madison, Oh. 44057

DRG. NO. A-58888-4
1 OF 1